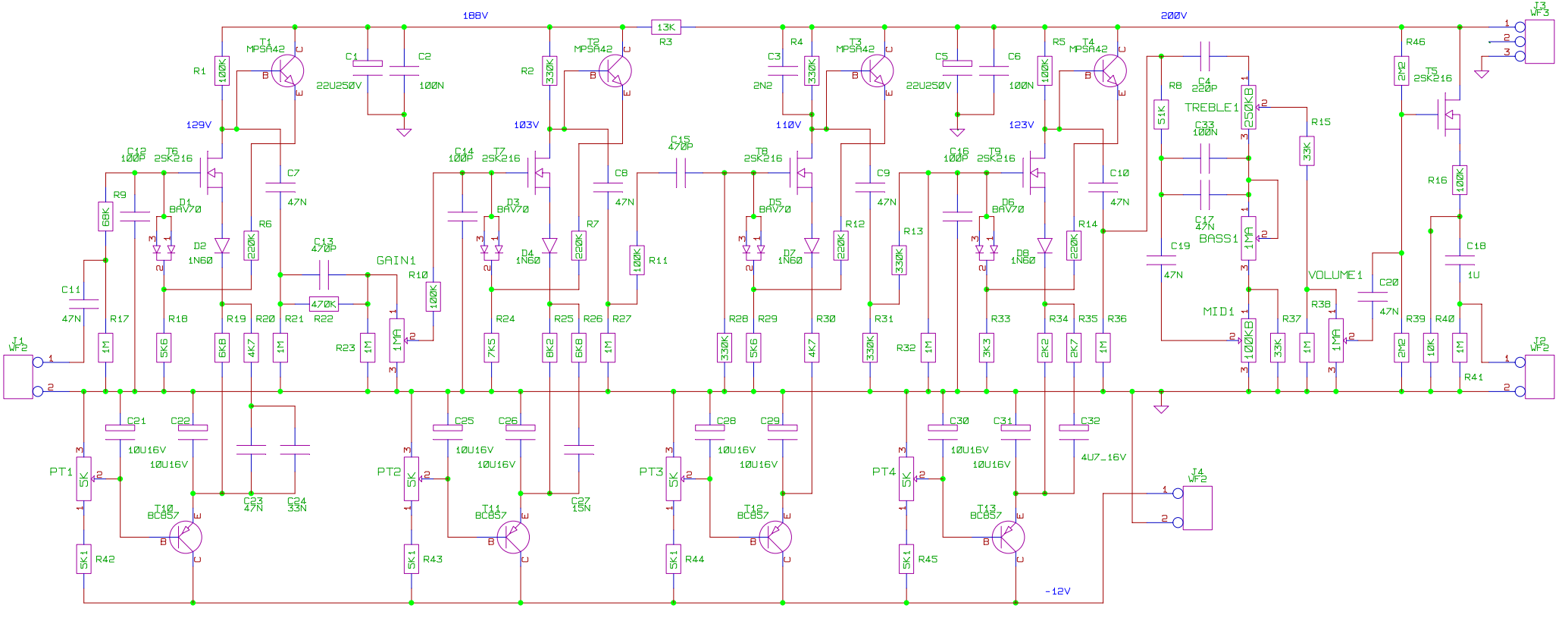

188V
200V
13K
R3
T1 MPSA42
T2 MPSA42
T3 MPSA42
T4 MPSA42
R1 100K
R2 330K
R4 330K
R5 100K
C1 22U250V
C2 100N
C3 2N2
C5 22U250V
C6 100N
129V
103V
110V
123V
C12 100P
T6 2SK216
C14 100P
T7 2SK216
C15 470P
T8 2SK216
C16 100P
T9 2SK216
C7 47N
C8 47N
C9 47N
C10 47N
R9 68K
D1 BAV70
D2 1N60
R6 220K
C13 470P
GAIN1
R10 100K
D3 BAV70
D4 1N60
R7 220K
R11 100K
D5 BAV70
D7 1N60
R12 220K
R13 330K
D6 BAV70
D8 1N60
R14 220K
C11 47N
R17 1M
R18 5K6
R19 6K8
R20 4K7
R21 1M
R22 470K
R23 1M
1MA
R24 7K5
R25 8K2
R26 6K8
R27 1M
R28 330K
R29 5K6
R30 4K7
R31 330K
R32 1M
R33 3K3
R34 2K2
R35 2K7
R36 1M
R8 51K
C4 220P
TREBLE1
250KB
C33 100N
C17 47N
BASS1
1MA
C19 47N
R15 33K
MID1
100KB
R37 33K
1M
VOLUME1
R38 1MA
C20 47N
R46 2M2
T5 2SK216
R16 100K
C18 1U
R39 2M2
R40 10K
1M
R41
J1 WF2
J2 WF2
J3 WF3
J4 WF2
C21 10U16V
C22 10U16V
C23 47N
C24 33N
C25 10U16V
C26 10U16V
C27 15N
C28 10U16V
C29 10U16V
C30 10U16V
C31 10U16V
C32 4U7_16V
PT1 5K
PT2 5K
PT3 5K
PT4 5K
T10 BC857
T11 BC857
T12 BC857
T13 BC857
R42 5K1
R43 5K1
R44 5K1
R45 5K1
-12V