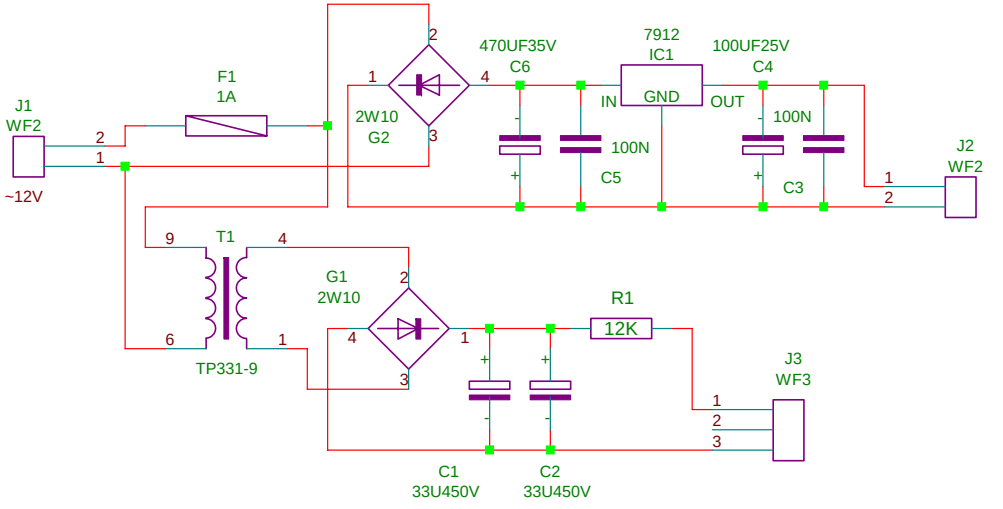
J1
WF2
~12V
F1
1A
2W10
G2
470UF35V
C6
7912
IC1
IN
GND
OUT
100UF25V
C4
100N
C5
100N
C3
J2
WF2
T1
TP331-9
G1
2W10
R1
12K
J3
WF3
C1
33U450V
C2
33U450V