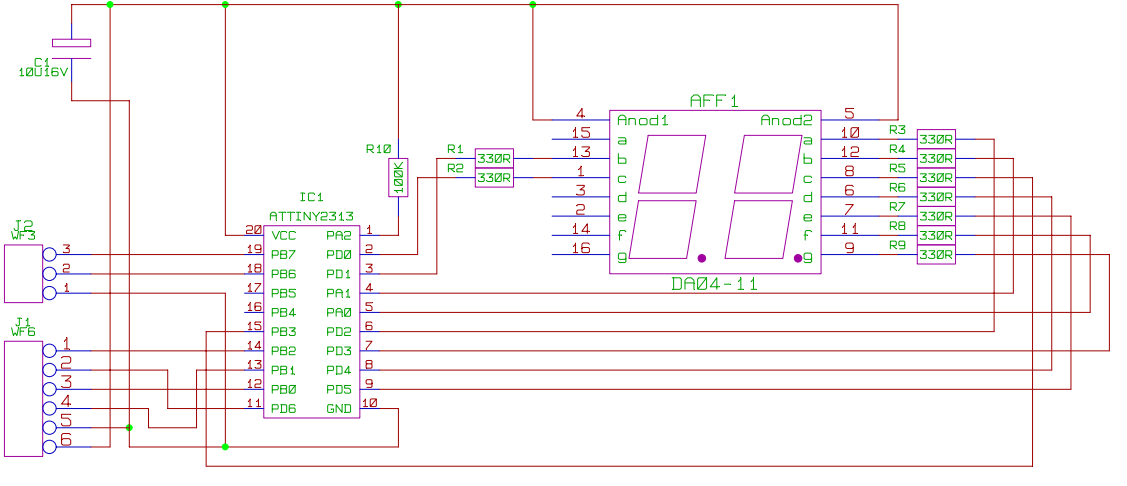
C1
10U16V
R10
100K
R1
R2
330R
330R
IC1
ATTINY2313
VCC
PB7
PB6
PB5
PB4
PB3
PB2
PB1
PB0
PD6
PA2
PD0
PD1
PA1
PA0
PD2
PD3
PD4
PD5
GND
J2
J1
AFF1
Anod1
Anod2
a
b
c
d
e
f
g
DA04-11
R3
R4
R5
R6
R7
R8
R9
330R