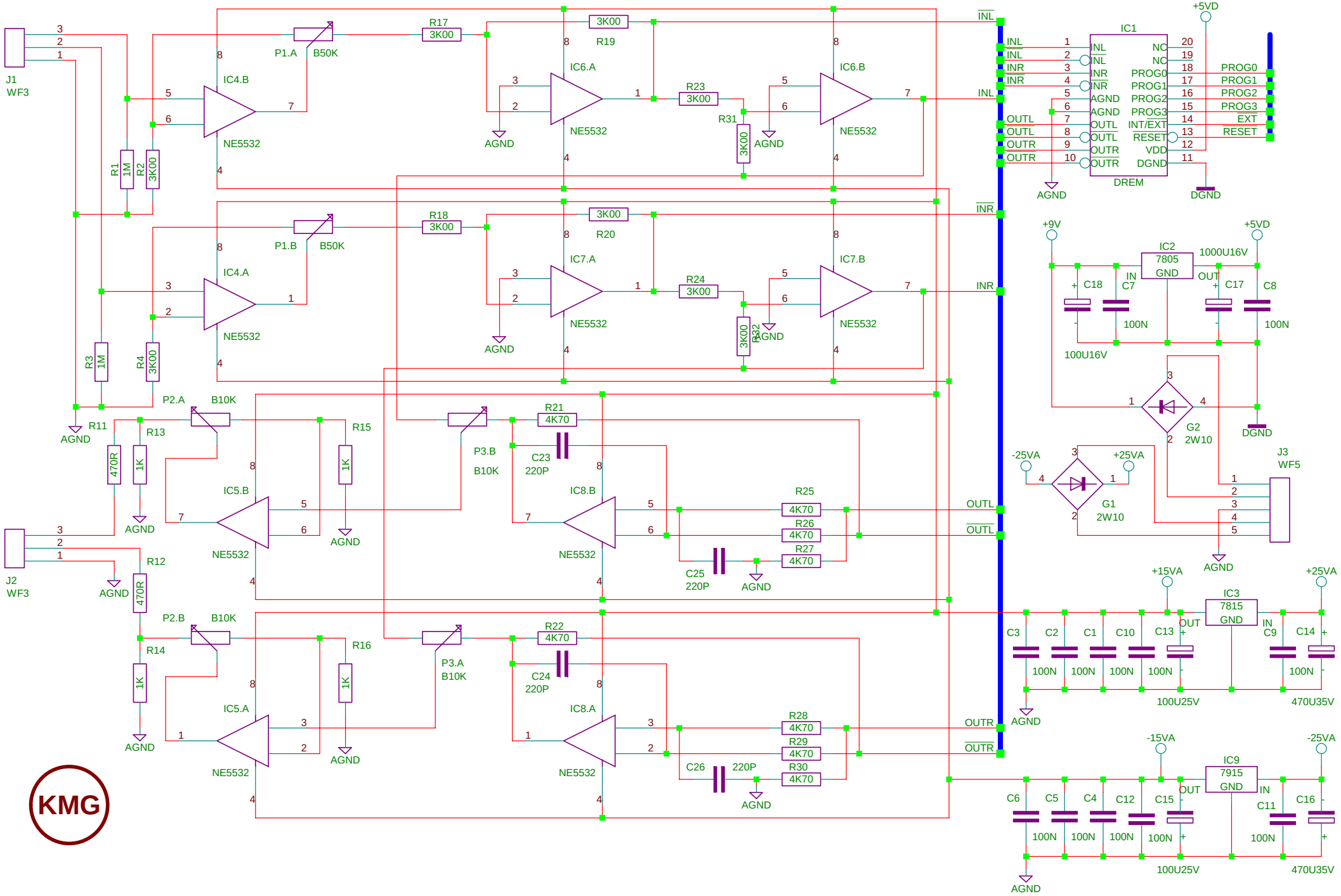
J1
WF3
J2
WF3
J3
WF5
IC1
DREM
IC2
7805
GND
IC3
7815
GND
IC9
7915
GND
IC4.A
IC4.B
IC5.A
IC5.B
IC6.A
IC6.B
IC7.A
IC7.B
IC8.A
IC8.B
NE5532
P1.A
P1.B
P2.A
P2.B
P3.A
P3.B
B50K
B10K
R17
R18
R19
R20
R21
R22
R23
R24
R25
R26
R27
R28
R29
R30
R31
R32
3K00
4K70
R1
1M
R2
R3
R4
R11
R12
R13
R14
R15
R16
470R
1K
C23
C24
C25
C26
220P
AGND
DGND
+5VD
+9V
+15VA
+25VA
-15VA
-25VA
INL
INR
OUTL
OUTR
PROG0
PROG1
PROG2
PROG3
EXT
RESET
INT/EXT
VDD
NC
C18
C7
C17
C8
1000U16V
100U16V
100N
G2
2W10
G1
2W10
C3
C2
C1
C10
C13
C9
C14
C6
C5
C4
C12
C15
C11
C16
100U25V
470U35V
KMG

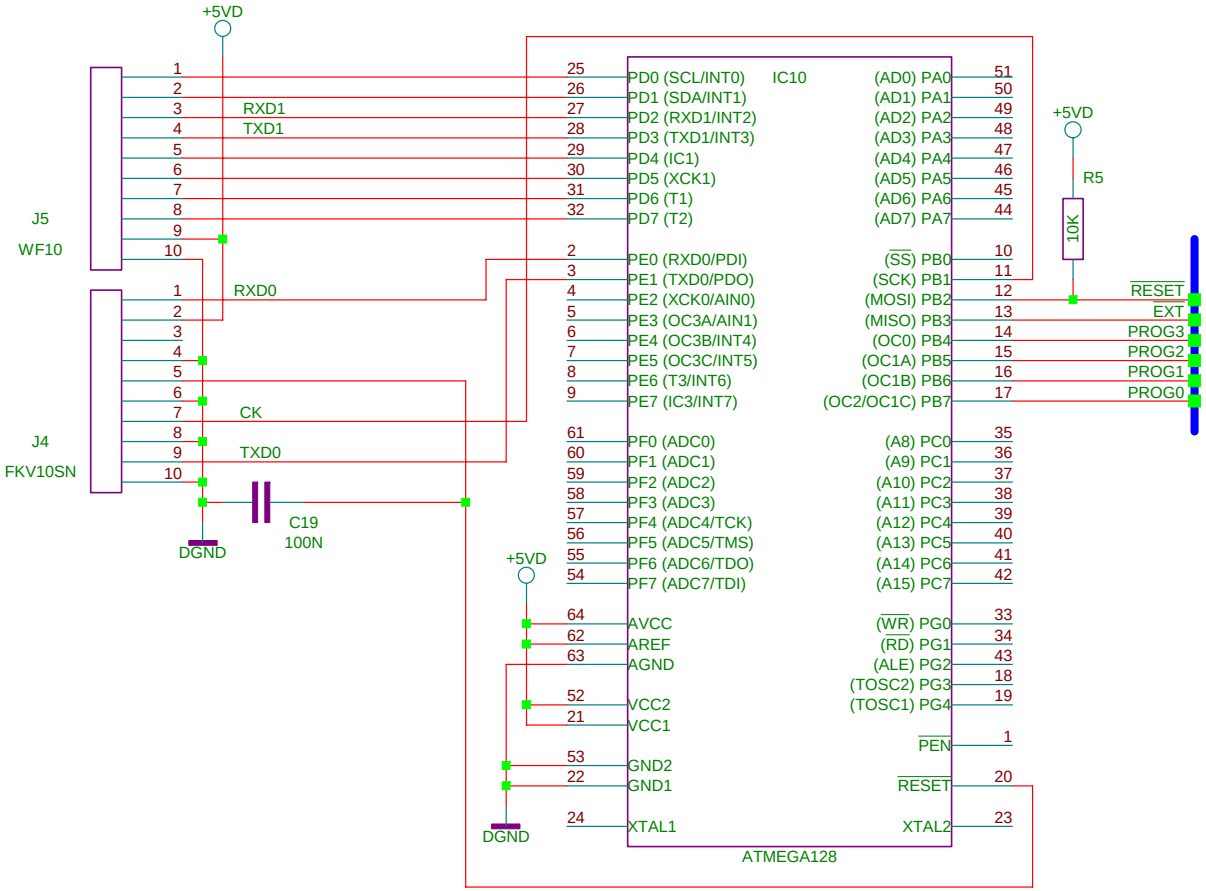
+5VD
J5
WF10
J4
FKV10SN
RXD1
TXD1
RXD0
CK
TXD0
C19
100N
DGND
IC10
PD0 (SCL/INT0)
PD1 (SDA/INT1)
PD2 (RXD1/INT2)
PD3 (TXD1/INT3)
PD4 (IC1)
PD5 (XCK1)
PD6 (T1)
PD7 (T2)
PE0 (RXD0/PDI)
PE1 (TXD0/PDO)
PE2 (XCK0/AIN0)
PE3 (OC3A/AIN1)
PE4 (OC3B/INT4)
PE5 (OC3C/INT5)
PE6 (T3/INT6)
PE7 (IC3/INT7)
PF0 (ADC0)
PF1 (ADC1)
PF2 (ADC2)
PF3 (ADC3)
PF4 (ADC4/TCK)
PF5 (ADC5/TMS)
PF6 (ADC6/TDO)
PF7 (ADC7/TDI)
AVCC
AREF
AGND
VCC2
VCC1
GND2
GND1
XTAL1
(AD0) PA0
(AD1) PA1
(AD2) PA2
(AD3) PA3
(AD4) PA4
(AD5) PA5
(AD6) PA6
(AD7) PA7
(SS) PB0
(SCK) PB1
(MOSI) PB2
(MISO) PB3
(OC0) PB4
(OC1A) PB5
(OC1B) PB6
(OC2/OC1C) PB7
(A8) PC0
(A9) PC1
(A10) PC2
(A11) PC3
(A12) PC4
(A13) PC5
(A14) PC6
(A15) PC7
(WR) PG0
(RD) PG1
(ALE) PG2
(TOSC2) PG3
(TOSC1) PG4
PEN
RESET
XTAL2
ATMEGA128
R5
10K
RESET
EXT
PROG3
PROG2
PROG1
PROG0