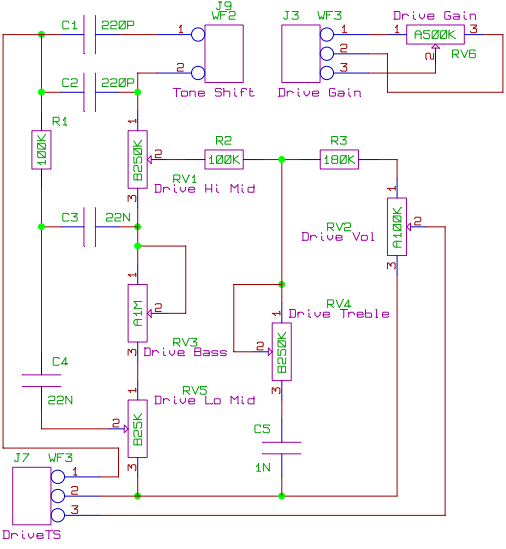
C1
220P
J9
WF2
Tone Shift
C2
220P
R1
100K
B250K
R2
100K
R3
100K
RV1
Drive Hi Mid
C3
22N
RV2
Drive Vol
A100K
A1M
RV4
Drive Treble
RV3
Drive Bass
B250K
C4
22N
RV5
Drive Lo Mid
B25K
C5
1N
J7
WF3
DriveTS
J3
WF3
Drive Gain
A500K
RV6
Drive Gain

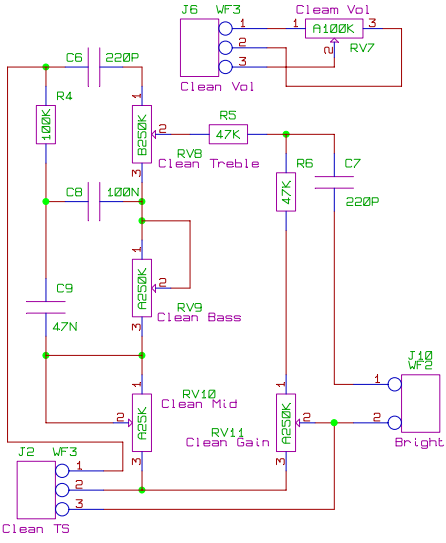
J6
WF3
Clean Vol
A100K
RV7
Clean Vol
C6
220P
R4
100K
B250K
R5
47K
RV8
Clean Treble
R6
47K
C7
220P
C8
100N
C9
47N
A250K
RV9
Clean Bass
J10
WF2
Bright
RV10
Clean Mid
A25K
A250K
RV11
Clean Gain
J2
WF3
Clean TS